Property of Yanmar Marine International (All rights reserved).

3RD ANGLE PROJECTION

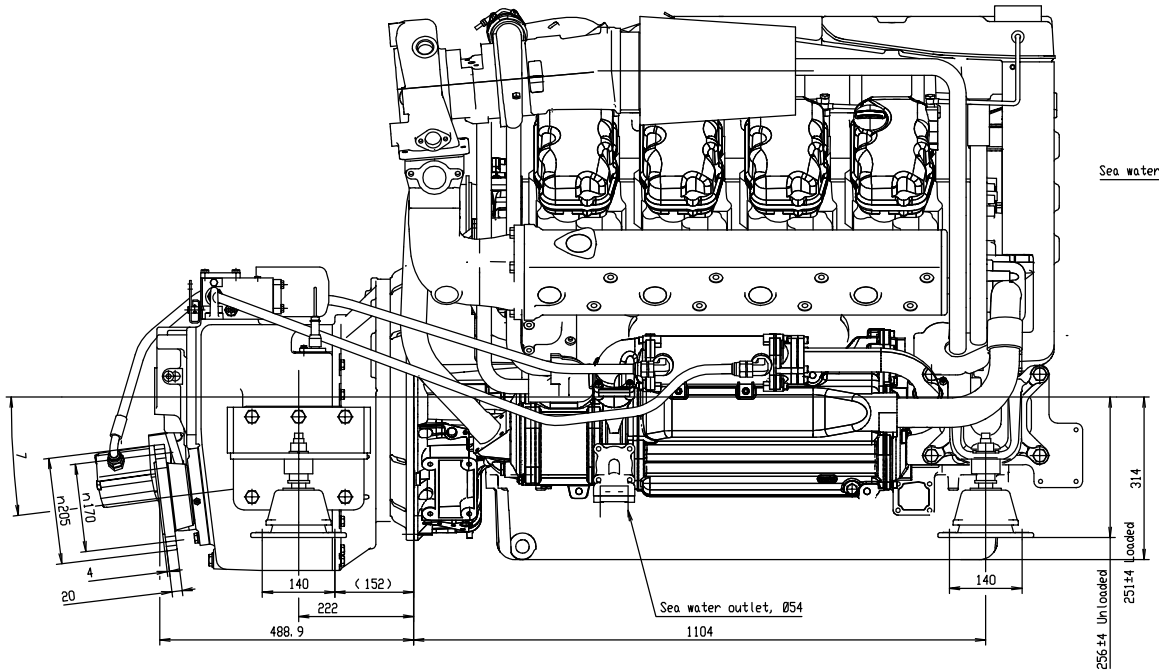

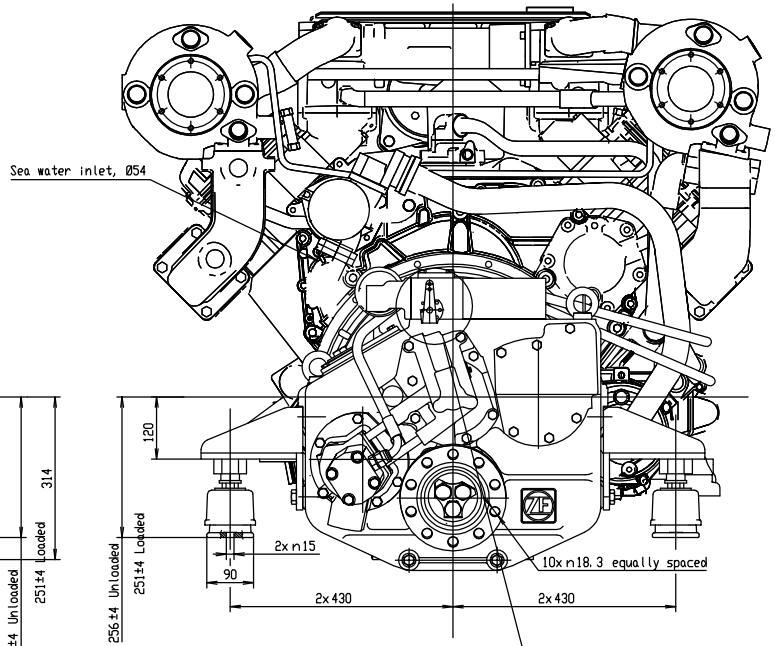

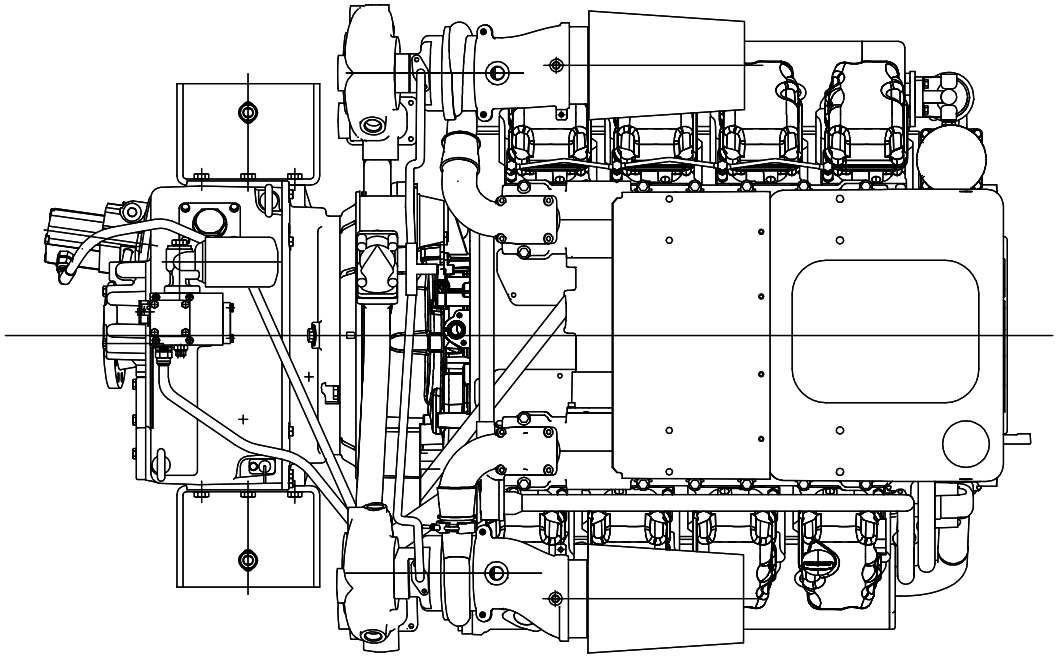

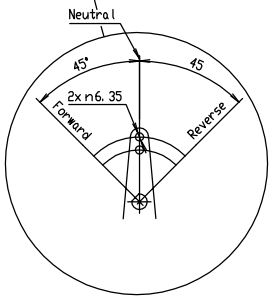

Scale 1:2

.ALL DIMENSIONS ARE IN MILLIMETERS

Scale	YANMAR MARINE INTERNATIONAL	SY-8SY-STP WITH ZF350A
1/5	24 April 2005	

GROUP, USER=EM2, MT01