NEED	PURCHASING SPECIFICATION	REQUEST FOR APPROVAL	DELIVERY DRAWING	INSPECTING STANDARD	QC-PROCESS
○	·	·	·	·	·

GEN. TOL. 一般公差		OUTSIDE	INSIDE
DRAFT ANG. 抜き勾配		2/100	3/100
CAST WALL THICK. 鋳肉厚		3/100	

NOMINAL DIM.	5 MAX	5 TO = 10	10 TO = 18	18 TO = 30	30 TO = 50
DIVISION					
SANDMOLD	±1.0	±1.5	±2.0	±3.0	±3.5
SHELL	±0.8	±1.0	±1.5	±2.0	±2.0

L.-CAST 鋳造ボス	120 MAX	120 TO = 250	250 TO = 400	400 TO = 800	800 TO = 1600	1600 TO = 3150
	±1.5	±2.0	±3.0	±4.0	±5.0	±7.0
	±1.0	±1.5	±2.0	±3.0	±4.0	±6.0

L.-CHIP 面取り	0.5 TO = 6	6 TO = 30	30 TO = 120	120 TO = 400	400 TO = 1000	1000 TO = 2000	2000 TO = 4000
	±0.1	±0.2	±0.3	±0.5	±0.8	±1.2	±2.0

ANG.-CHIP 角度面取り	10 MAX	10 TO = 50	50 TO = 120	120 TO = 400	400 MIN
	±1DEG.	±30MIN	±20MIN	±10MIN	± 5MIN

FIGURE DIMENSION | GT.CODE

○ AND ⌓:RADIAL

3RD ANGLE PROJECTION

CAREER

(2008.11.28) オプション部品用
外形図として取扱承認する。
RELEASE OF OUTLINE DRAWING FOR OPTIONAL PARTS.
(YDSBD-08004)(区分)

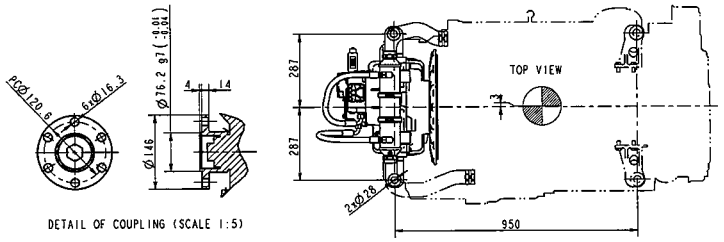

DETAIL OF COUPLING (SCALE 1:5)

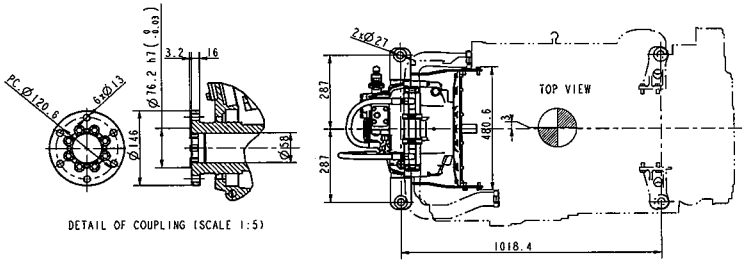

DETAIL OF COUPLING (SCALE 1:5)

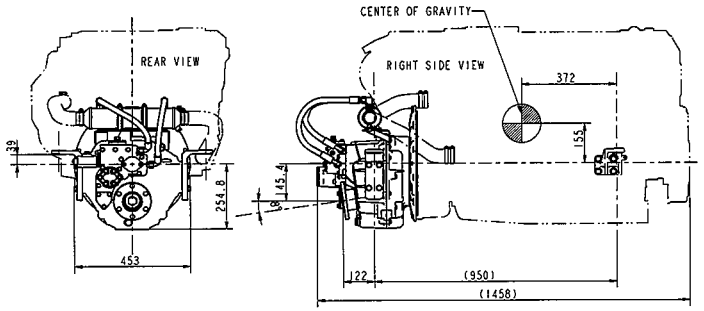

KMH61A MARINE GEAR

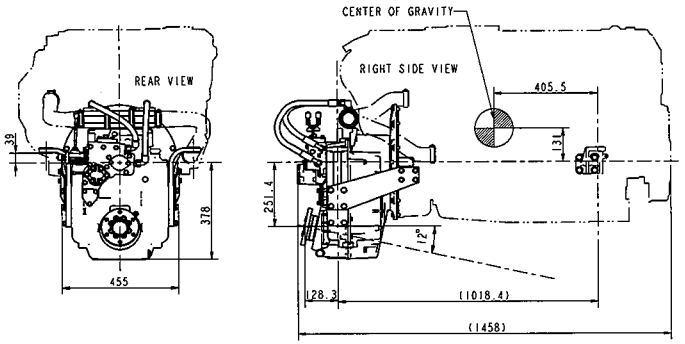

KMH61V MARINE GEAR

DELIVERY '08.12.08

NOTES.
REFER TO "B2-19578-0050" DRAWING FOR DETAILS OF ENGINE.

開発部 MANAGER	梶		
原材質量 MASS(RAW)	kg (± Σ)		
完成質量 MASS(%)	(± Σ)		
CHECKED 松岡 前原	SEC.MANAGER 野村	SPECIALIST 西條	
MODEL 6LY3	SCALE 1:10 (1:5)		
QTY -	MATERIAL		
6LY3 アプリケーション			
DESIGNED T.Miyajima	DRAWN	DATE:Y.M.D 2008.11.28	NAME 6LY3 APPLICATION(1/2) OUTLINE DRAWING FOR OPTIONAL PARTS
YANMAR YANMAR CO.,LTD. DEVELOPMENT DEPT.	CODE	B2-19578-0060	DRAW SIZE A1

GEAR MODEL	REDUCTION				DRY WEIGHT WITH ENGINE, kg	DIRECTION OF ROTATION (AT OUTPUT COUPLING)
KMH61A	-	1.55	2.04	2.43	704	BOTH
KMH61V	1.24	1.49	1.98	2.43	736	

CAD data information of this drawing.

CAD SYSTEM	Pro/Engineer wildfire 2.0
FILE ARCHIVER	ZIP
ARCHIVE FILE NAME	B2-19578-0060_rev0.zip

Conform to the Yanmar standard YIS V-0001J concerning "Use limitation of the environmental burden material" for the use of the environmental burden material of this part.

本部品の環境負荷物質の使用に関しては、YIS V-0001J(環境負荷物質の使用制限)を満足すること。

3D-CAD

NOTICE

GEOMETRICAL TOLERANCE

KIND OF TOLERANCE		SYMBOL
FORM	STRAIGHTNESS TOLERANCE	—
	CIRCULARITY TOLERANCE	○
	PROFILE OF LINE TOLERANCE	⌒
	FLATNESS TOLERANCE	⏥
	CYLINDRICITY TOLERANCE	⌭
	PROFILE TOLERANCE OF SURFACE	⌓
ORIENTATION	PARALLELISM TOLERANCE	//
	PERPENDICULARITY TOLERANCE	⊥
	ANGULARITY TOLERANCE	∠
LOCATION	POSITIONAL TOLERANCE	⌖
	CONCENTRICITY OR COAXIALITY TOLERANCE	◎
	SYMMETRY TOLERANCE	⌯
RUN-OUT	CIRCULAR RUN-OUT TOLERANCE	↗
	TOTAL RUN-OUT TOLERANCE	⌰

NEED ○	PURCHASING SPECIFICATION	REQUEST FOR APPROVAL	DELIVERY DRAWING	INSPECTING STANDARD	QC-PROCESS

3RD ANGLE PROJECTION

GEN. TOL. 一般公差	DRAFT ANG. 抜勾配/アール	OUTSIDE	INSIDE	CAST WALL THICK 鋳造肉厚	NOMINAL DIM. DIVISION	5 MAX	5 TO : 10	10 TO : 18	18 TO : 30	30 TO : 50	L.-CAST 鋳造部分	120 MAX	120 TO : 250	250 TO : 400	400 TO : 800	800 TO : 1600	1600 TO : 3150
		2/100	3/100	3/100	SANDMOLD	±1.0	±1.5	±2.0	±3.0	±3.5		±1.5	±2.0	±3.0	±4.0	±5.0	±7.0
					SHELL	±0.8	±1.0	±1.5	±2.0	±2.0		±1.0	±1.5	±2.0	±3.0	±4.0	±6.0

L.-CHIP 切り	0.5 TO : 6	±0.1	400 TO : 1000	±0.8
	6 TO : 30	±0.2	1000 TO : 2000	±1.2
	30 TO : 120	±0.3	2000 TO : 4000	±2.0
	120 TO : 400	±0.5		

ANG. CHIP 角度切り	10 MAX	±1DEG.
	10 TO : 50	±30MIN
	50 TO : 120	±20MIN
	120 TO : 400	±10MIN
	400 MIN	± 5MIN

FIGURE DIMENSION | GT.CODE

○ AND ⌓:RADIAL

C A R E E R

REFER TO (1/2) DWG.

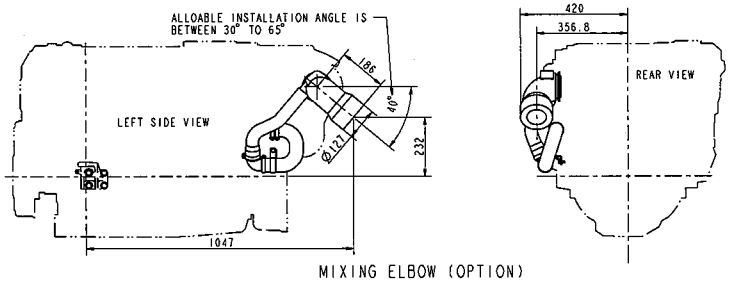

MIXING ELBOW (OPTION)
D19578-13100

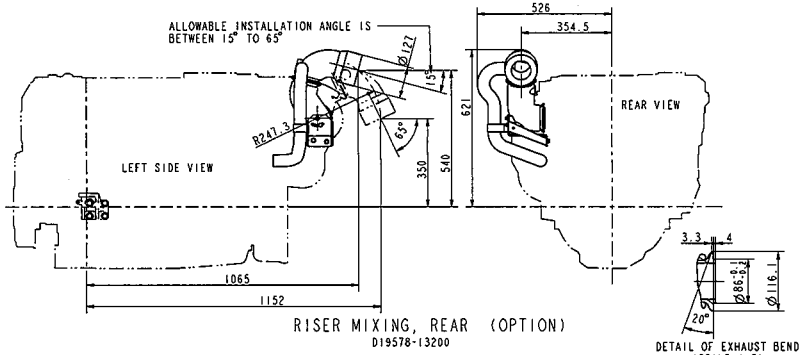

RISER MIXING, REAR (OPTION)
D19578-13200

DETAIL OF EXHAUST BEND (SCALE 1:5)

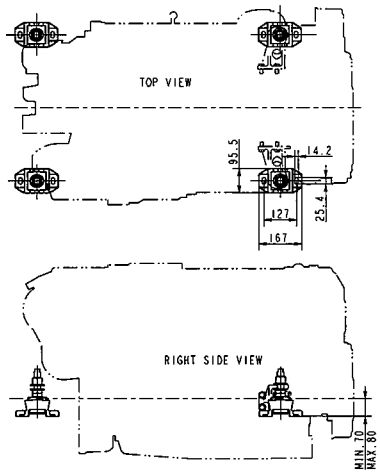

BARRY CONTROL ISOLATION MOUNTS (OPTION)
D19575-08500

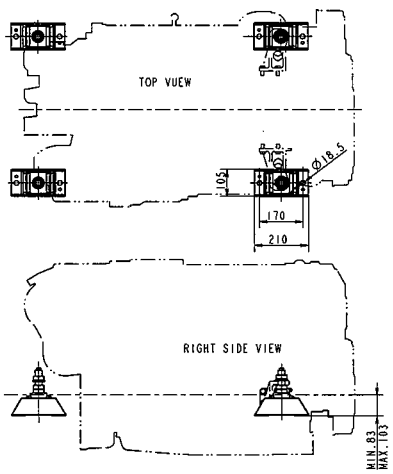

YT-15 ISOLATION MOUNTS (OPTION)
D19573-08500

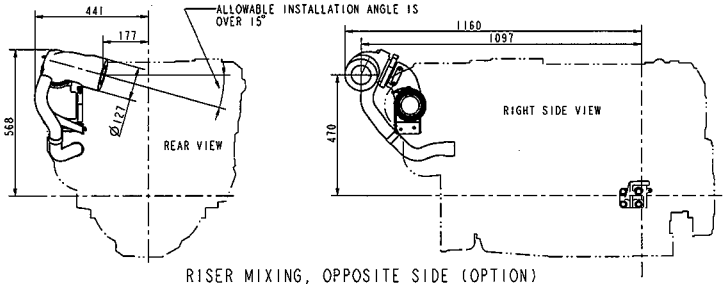

RISER MIXING, OPPOSITE SIDE (OPTION)
D19578-13210

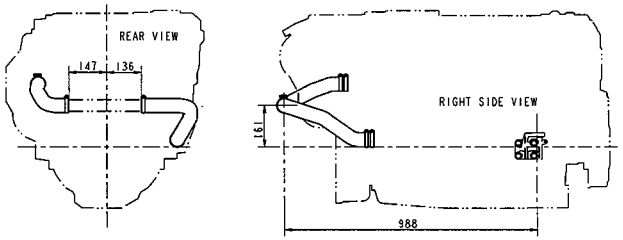

SEA WATER HOSES FOR OIL COOLER OF MARINE GEAR (STANDARD)
D19578-49110

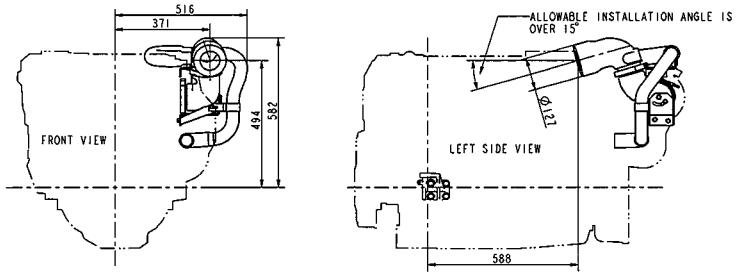

RISER MIXING, FRONT (OPTION)
D19578-13220

Conform to the Yanmar standard YIS V-0001J concerning "Use limitation of the environmental burden material" for the use of the environmental burden material of this part.

YIS V-0001J(環境負荷物質の使用制限に関する YIS)の規格に準拠すること。

3D-CAD

NOTICE

GEOMETRICAL TOLERANCE

KIND OF TOLERANCE | SYMBOL

FORM: STRAIGHTNESS TOLERANCE, CIRCULARITY TOLERANCE, SHAPE OF LINE TOLERANCE, FLATNESS TOLERANCE, CYLINDRICITY TOLERANCE, SHAPE OF SURFACE TOLERANCE

ORIENTATION: PARALLELISM TOLERANCE, PERPENDICULARITY TOLERANCE, ANGULARITY TOLERANCE

LOCATION: POSITIONAL TOLERANCE, COAXIALITY OF CONCENTRICITY TOLERANCE

RUN-OUT: CIRCULAR RUN-OUT TOLERANCE, TOTAL RUN-OUT TOLERANCE

荷付質量 MASS(RAW)	kg (± %)				
完成質量 MASS(%)	kg (± %)				
松岡	SEC.MANAGER 賀村	MODEL	6LY3	SCALE	1:10 (1:5)
CHECKED 前原	SPECIALIST 西條	MATERIAL			
		QTY	·		
DESIGNED T.Miyajima	DRAWN	DATE:Y.M.D 2008.11.28	NAME	6LY3 アプリケーション	

MANAGER 梶

6LY3 APPLICATION (2/2)

OUTLINE DRAWING FOR OPTIONAL PARTS

YANMAR

YANMAR CO.,LTD. DEVELOPMENT DEPT.

CODE B2-19578-0060 DRAW SIZE A1

DELIVERY '08.12.08