NEW	PURCHASING SPECIFICATION	REQUEST FOR APPROVAL	DELIVERY DRAWING	INSPECTING STANDARD	DC-PROCESS

3RD ANGLE PROJECTION

FIGURE DIMENSION | GT.CODE | ○ AND ⌭ RADIAL

C A R E E R

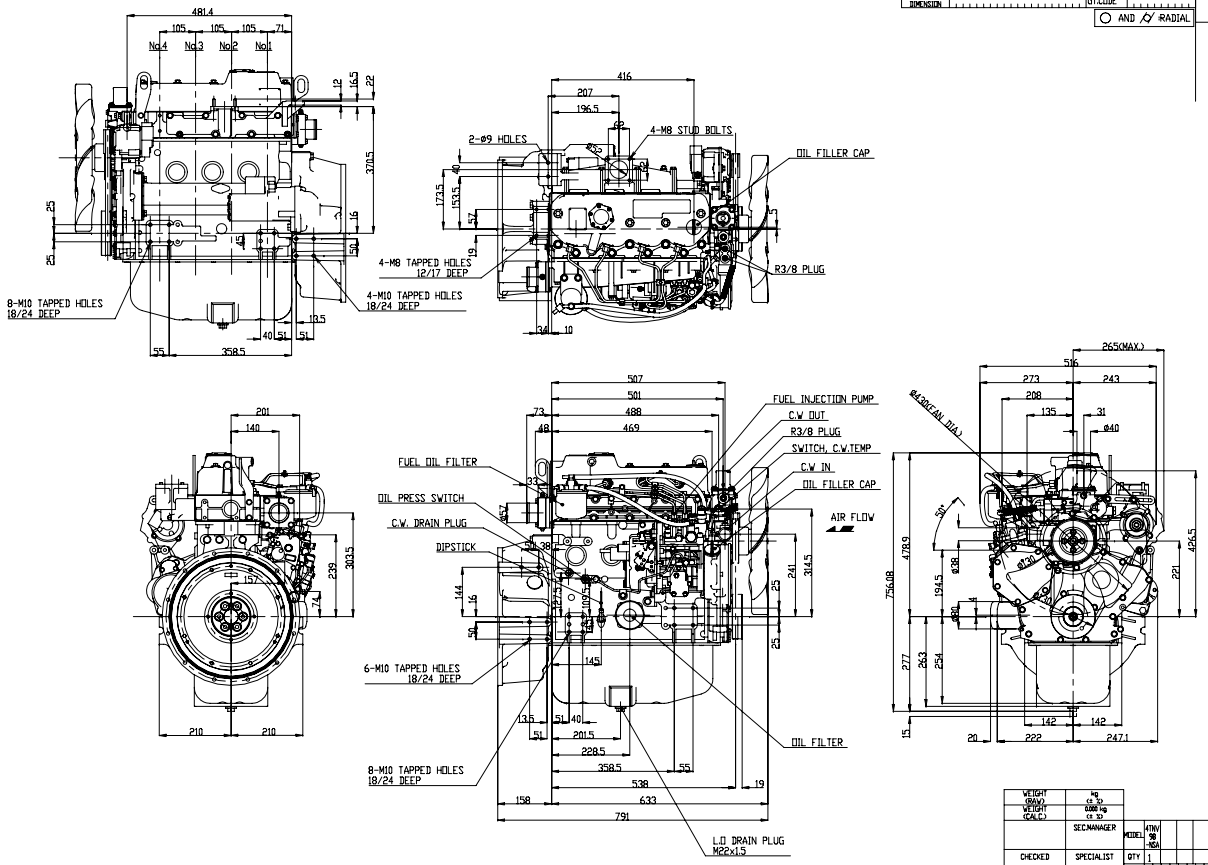

WEIGHT (RAW)	kg (± 3)				
WEIGHT (CALC)	0.000 kg (± 3)				
	SEC.MANAGER	MODEL	4TNV 98 -NSA	SCALE	1:5
CHECKED	SPECIALIST	QTY	1	MATERIAL	——
DESIGNED K.Nomura	DRAWN E.Adachi	DATE(Y.M.D) 2003. 5.12	NAME	OUTLINE	

YANMAR

YANMAR CO.,LTD. ENGINE PRODUCT OPERATIONS DIV.

CODE B3-29907-0070 REV. A1

	GNMAGER	MANAGER

3D-CAD