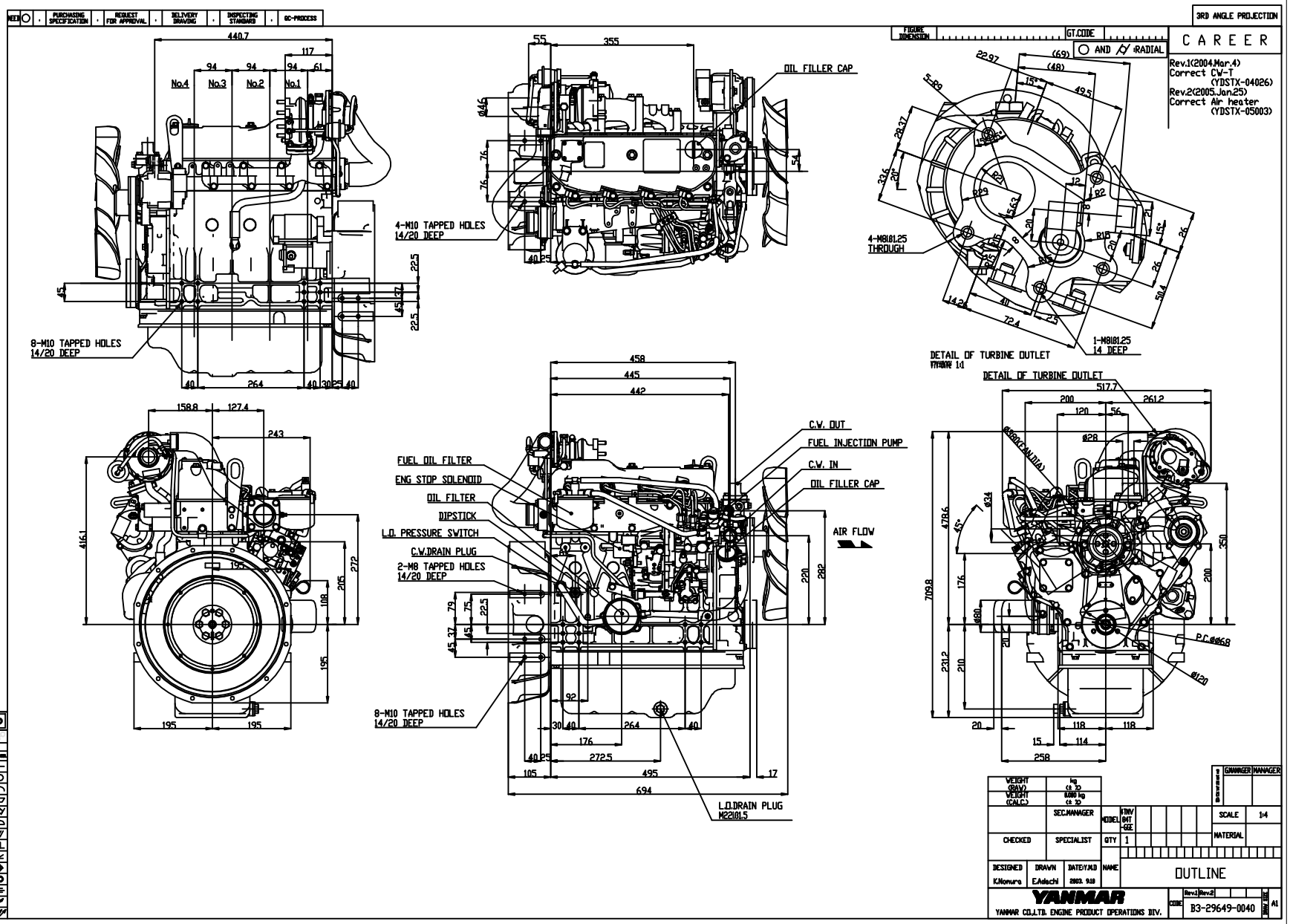
NEED
PURCHASING SPECIFICATION
REQUEST FOR APPROVAL
DELIVERY DRAWING
INSPECTING STANDARD
QC-PROCESS
3RD ANGLE PROJECTION
FIGURE DIMENSION
GT.CODE
AND
RADIAL
CAREER
Rev.1(2004.Mar.4)
Correct CW-T
(YDSTX-04026)
Rev.2(2005.Jan.25)
Correct Air heater
(YDSTX-05003)
No.4
No.3
No.2
No.1
8-M10 TAPPED HOLES
14/20 DEEP
4-M10 TAPPED HOLES
14/20 DEEP
OIL FILLER CAP
4-M8(1.25
THROUGH
1-M8(1.25
14 DEEP
DETAIL OF TURBINE OUTLET
YANMAR 1:1
DETAIL OF TURBINE OUTLET
FUEL OIL FILTER
ENG STOP SOLENOID
OIL FILTER
DIPSTICK
L.O. PRESSURE SWITCH
C.W.DRAIN PLUG
2-M8 TAPPED HOLES
14/20 DEEP
8-M10 TAPPED HOLES
14/20 DEEP
C.W. OUT
FUEL INJECTION PUMP
C.W. IN
OIL FILLER CAP
AIR FLOW
L.O.DRAIN PLUG
M22(1.5
P.C.φ68
φ120
3D-CAD
NOTICE
WEIGHT (RAW)
WEIGHT (CALC)
SEC.MANAGER
SPECIALIST
CHECKED
DESIGNED
K.Nomura
DRAWN
E.Adachi
DATE(Y.M.D)
2003. 9.18
MODEL
QTY
SCALE
1:4
MATERIAL
NAME
OUTLINE
YANMAR
YANMAR CO.,LTD. ENGINE PRODUCT OPERATIONS DIV.
CODE
B3-29649-0040
A1