NEED	○	·	PURCHASING SPECIFICATION	·	REQUEST FOR APPROVAL	·	DELIVERY DRAWING	·	INSPECTING STANDARD		QC-PROCESS

3RD ANGLE PROJECTION

GEN. TOL. 一般公差	OUTSIDE	INSIDE
DRAFT ANG. 鋳抜き勾配	2/100	3/100
	3/100	

CAST WALL THICK. 鋳造肉厚	NOMINAL DIM.	5 TO = 10	10 TO = 18	18 TO = 30	30 TO = 50
	DIVISION	5 MAX			
	SANDMOLD	±1.0	±1.5	±2.0	±3.0	±3.5
	SHELL	±0.8	±1.0	±1.5	±2.0	±2.0

L.-CAST 鋳造寸	120 MAX	120 TO = 250	250 TO = 400	400 TO = 800	800 TO = 1600	1600 TO = 3150
	±1.5	±2.0	±3.0	±4.0	±5.0	±7.0
	±1.0	±1.5	±2.0	±3.0	±4.0	±6.0

L.-CHIP 削り				
	0.5 TO = 6	±0.1	400 TO = 1000	±0.8
	6 TO = 30	±0.2	1000 TO = 2000	±1.2
	30 TO = 120	±0.3	2000 TO = 4000	±2.0
	120 TO = 400	±0.5		

ANG. CHIP 角度削り	
10 MAX	±1DEG.
10 TO = 50	±30MIN
50 TO = 120	±20MIN
120 TO = 400	±10MIN
400 MIN	± 5MIN

FIGURE DIMENSION

GT.CODE

○ AND ⌭ :RADIAL

C A R E E R

(2010.08.31)量産用として図面新制する。
RELEASE OF DRAWING FOR MASS PRODUCTION.
(YDSBD-10005)(宮島)

REV.1 (2011.03.17)
下記変更する。
- ブリーザホース変更
- 海水ポンプ変更
- 機関重量修正

CHANGE AS FOLLOWS.
- CHANGE HOSE OF BREATHER.
- CHNAGE SEA WATER PUMP.
- CORRECT DRY WEIGHT.

(YDSBD-11005)(宮島)

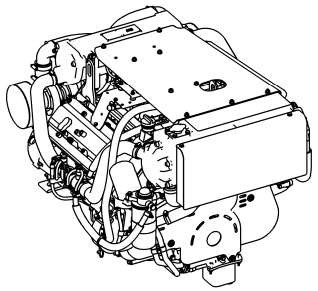

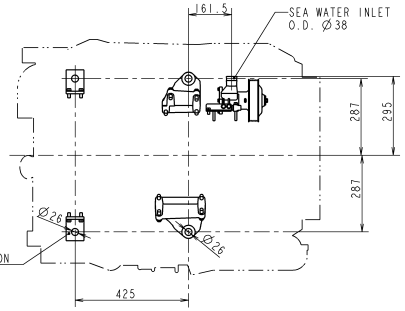

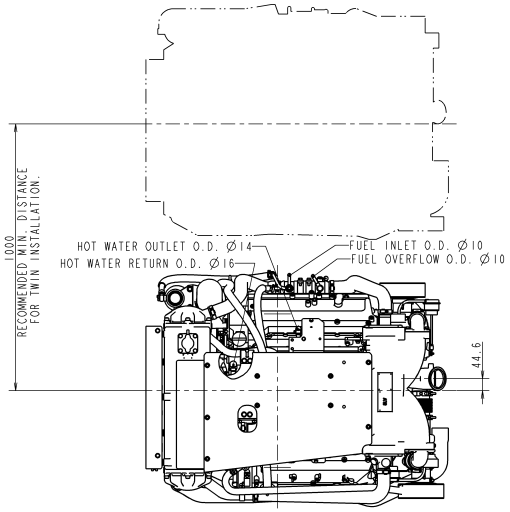

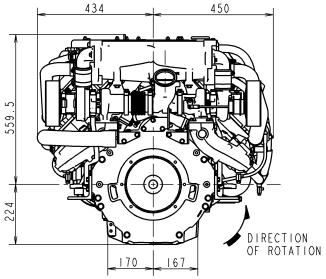

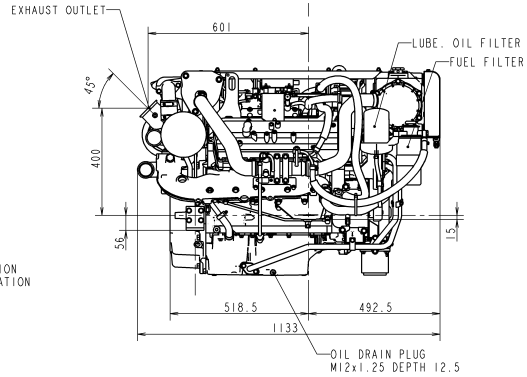

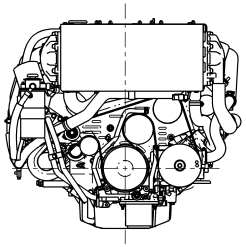

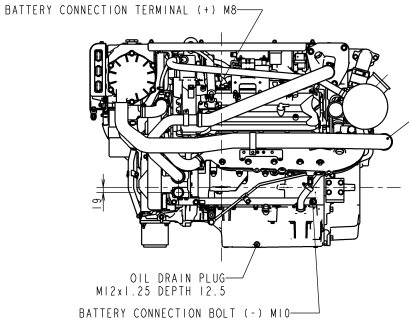

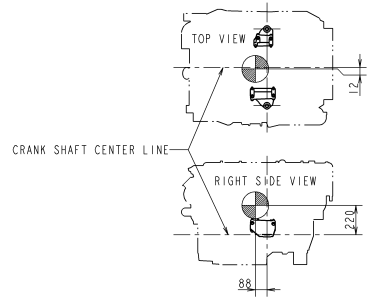

CENTER OF GRAVITY
SCALE 1:20

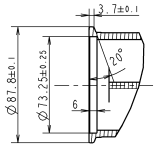

DETAIL OF EXHAUST OUTLET
(SCALE 1:2)

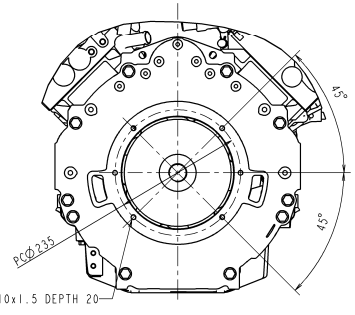

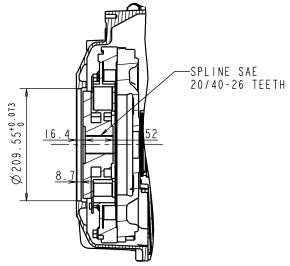

DETAIL OF FLYWHEEL OUTPUT SIDE
(SCALE 1:5)

With respect to the use of environmentally hazardous substances (or the parts, the substances in use shall conform to the requirement specified in YIS Y-0001J, "Restrictions of use (or Environmentally Hazardous Substances".

本製品の製品仕様書の指定した場合、YIS Y-0001J(製品仕様書の指定)の規制値を満足すること。

3D-CAD

NOTICE

GEOMETRICAL TOLERANCE		
KIND OF TOLERANCE		SYMBOL
FORM	STRAIGHTNESS TOLERANCE	—
	CIRCULARITY TOLERANCE	○
	PROFILE OF LINE TOLERANCE	⌒
	FLATNESS TOLERANCE	▱
	CYLINDRICITY TOLERANCE	⌭
	PROFILE OF SURFACE	⌓
ORIENTATION	PARALLELISM TOLERANCE	//
	PERPENDICULARITY TOLERANCE	⊥
	ANGULARITY TOLERANCE	∠
LOCATION	POSITIONAL TOLERANCE	⌖
	CONCENTRICITY OR CONCENTRICITY TOLERANCE	◎
	SYMMETRY TOLERANCE	⌯
RUN-OUT	CIRCULAR RUN-OUT TOLERANCE	↗
	TOTAL RUN-OUT TOLERANCE	⌰

CAD DATA INFORMATION OF THIS DRAWING.	
CAD SYSTEM	Pro/Engineer Wildfire2.0
ARCHIVE FILE NAME	B2-19798-0010_rev1.zip
FILE ARCHIVER	ZIP
DATA TRANSLATION FORMAT	IGES

SPECIFICATIONS				
MODEL		8LV320	8LV350	8LV370
FUEL STOP POWER(ISO 8665) (FLYWHEEL OUTPUT)	kW (PS)	235(320)	257(350)	272(370)
	min⁻¹	3800	3800	3800
DRY WEIGHT	kg	435 ~~440~~		
DIRECTION OF CRANK SHAFT ROTATION		COUNTER-CLOCKWISE AT FLYWHEEL SIDE		

MASS,RAW	kg (±%)		
MASS,CALC.	kg (±%)		
SEN.ENGINEER 伊藤	SEC.MANAGER 荻沢	MODEL	8LV 320 / 8LV 350 / 8LV 370
CHECKED 志賀	SPECIALIST —	QTY	
DESIGNED 宮島	DRAWN	DATE:Y.M.D 2010.08.31	NAME 8LV エンジン

開発部 MANAGER 梶

SCALE 1:10 (1:2,1:5,1:20)

MATERIAL

8LV ENGINE
OUTLINE DRAWING

YANMAR
YANMAR CO.,LTD. DEVELOPMENT DEPT.

CODE B2-19798-0010 REV.1 DRAW SIZE A1