Property of Yanmar Marine International (All rights reserved).

## DETAIL OF COUPLING

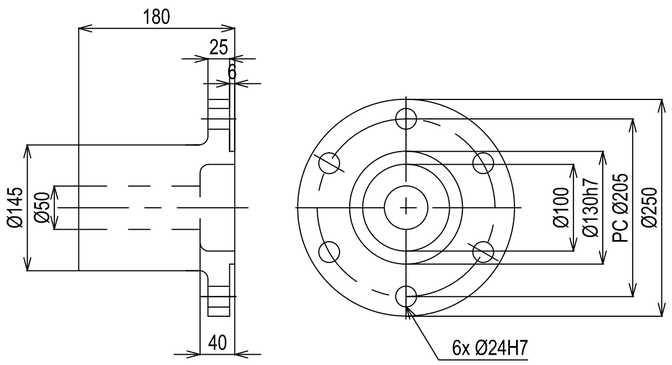


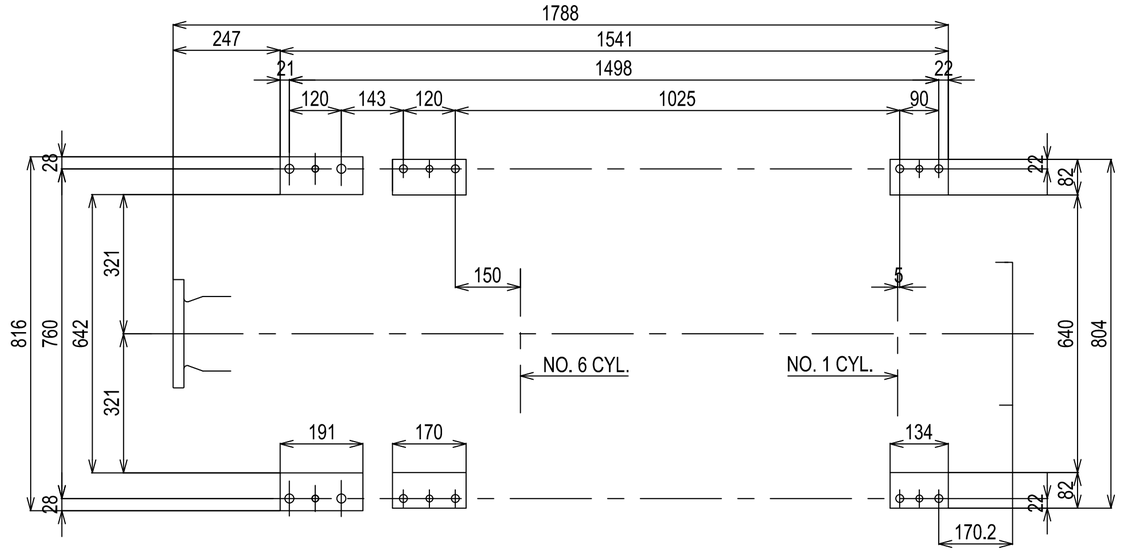


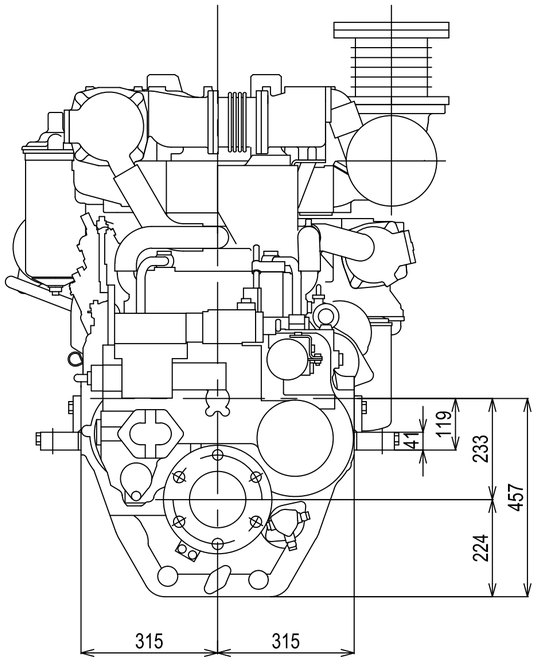


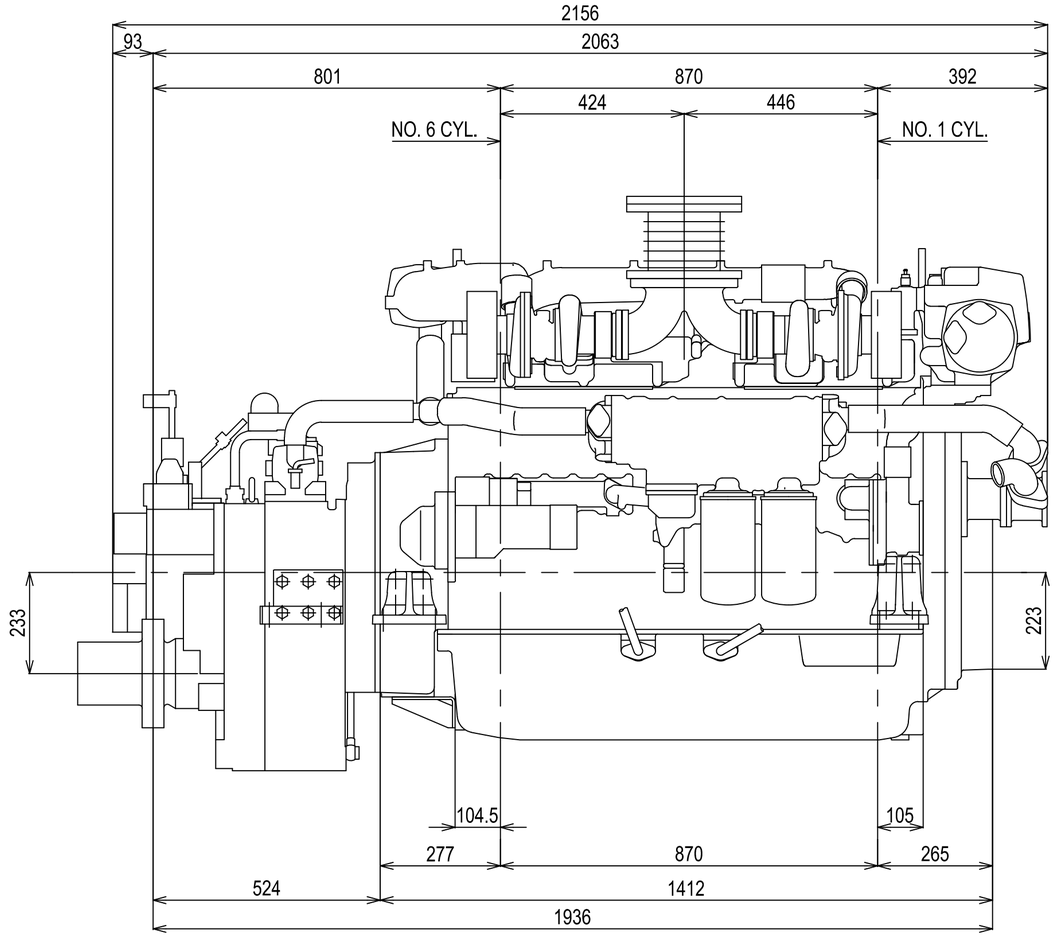


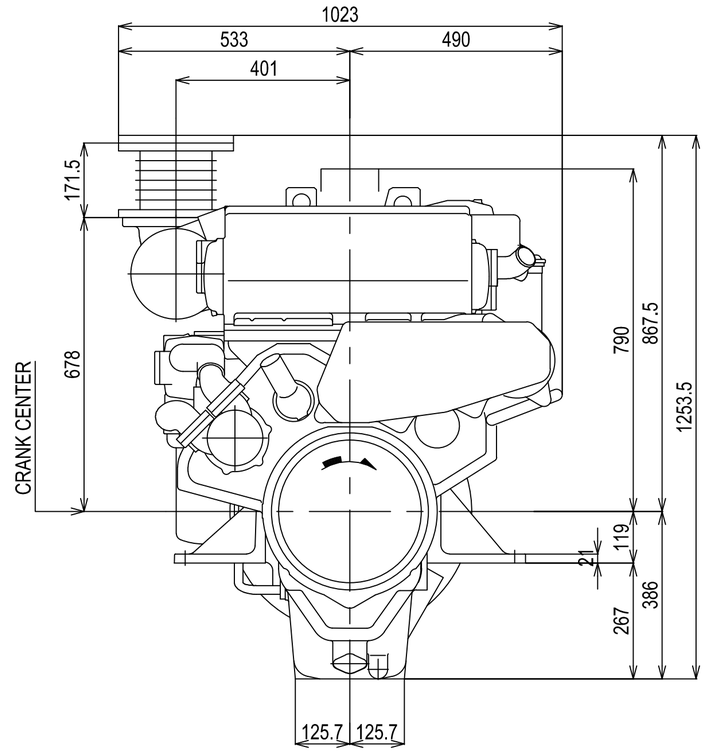


## DETAIL OF MOUNTING BLOCK

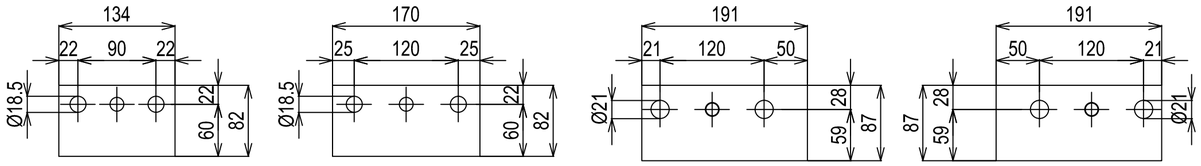


| | | | | | |
|---|---|---|---|---|---|
| Serie: | 6HY | Engine: | 6HYM-WETxYXH-160 | Release: | R2011-1 |
| Scale: | 1:10 (1:5) | Date: | 01-01-2011 | Dimensions: | mm |

YANMAR