Property of Yanmar Marine International (All rights reserved).

DETAIL OF FLYWHEEL

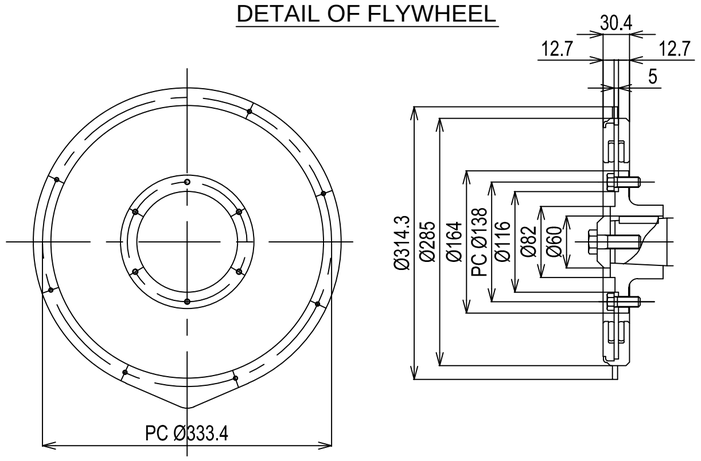

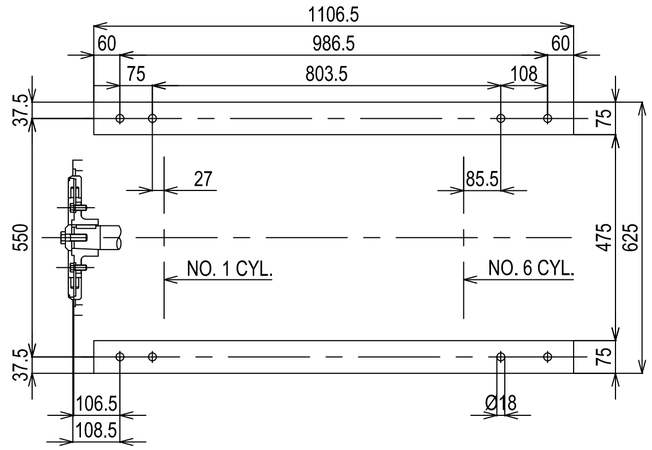

DETAIL OF FLYWHEEL

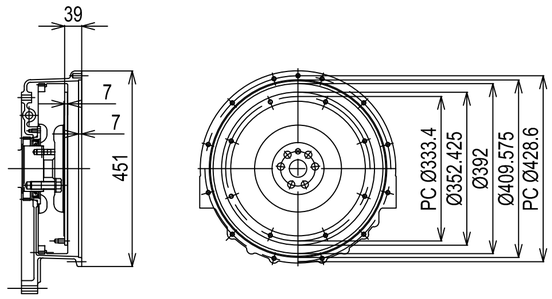

Flywheel housing & Flywheel : SAE #3 & #11-12

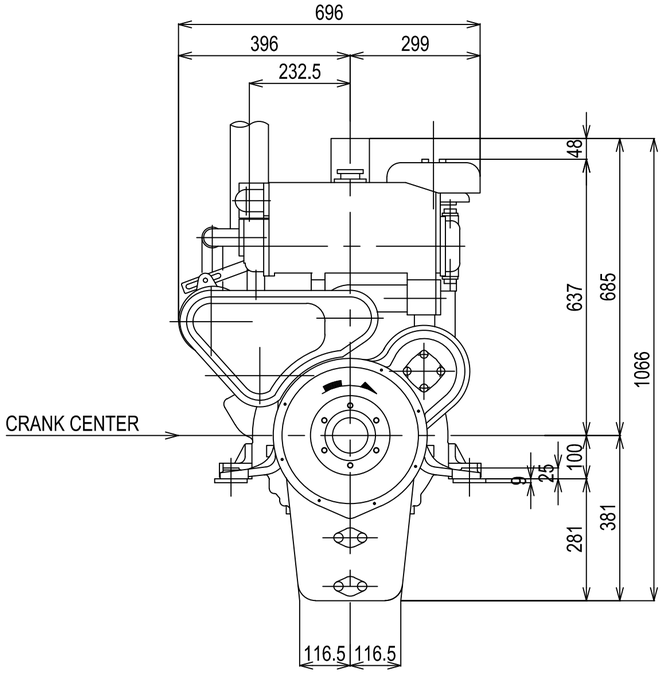

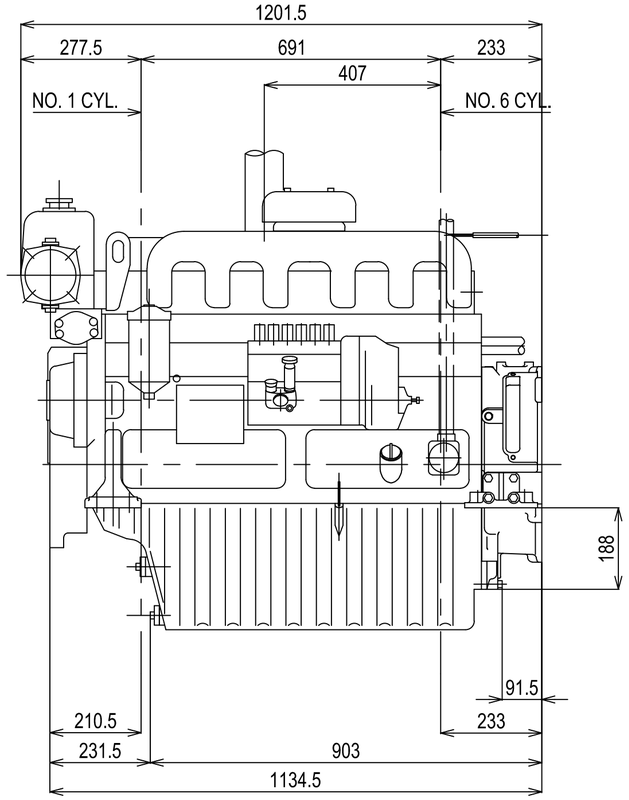

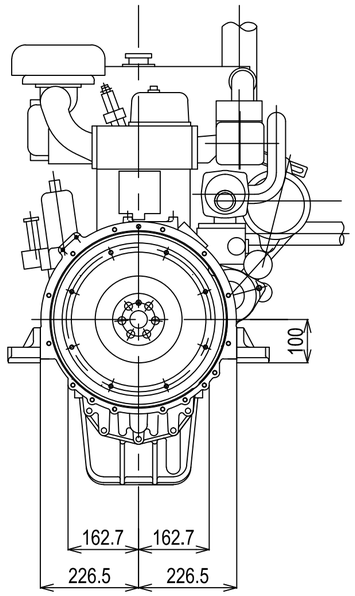

Serie:	6CH3	Engine:	6CHE3	Release:	R2011-1
Scale:	1:10 (1:5)	Date:	01-01-2011	Dimensions:	mm

YANMAR