NEED	○	.	PURCHASING SPECIFICATION	.	REQUEST FOR APPROVAL	.	DELIVERY DRAWING	.	INSPECTING STANDARD	.	QC-PROCESS

3RD ANGLE PROJECTION

C A R E E R

ISSUE THE DRAWING FOR MASS PRODUCTION. (YDSBD-05003)
REV.1(19th,May,2005)
CHANGE THE OVERALL HEIGHT BY CHANGING TO THE HEAT EXCHANGER OF 4JH4-HTE (YDSBD-05004)(NISHINO)

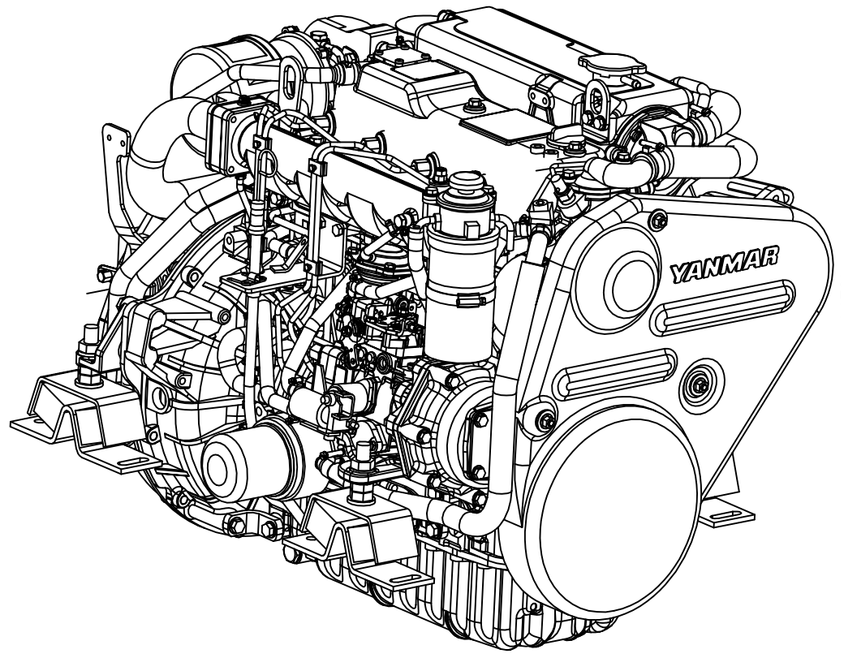

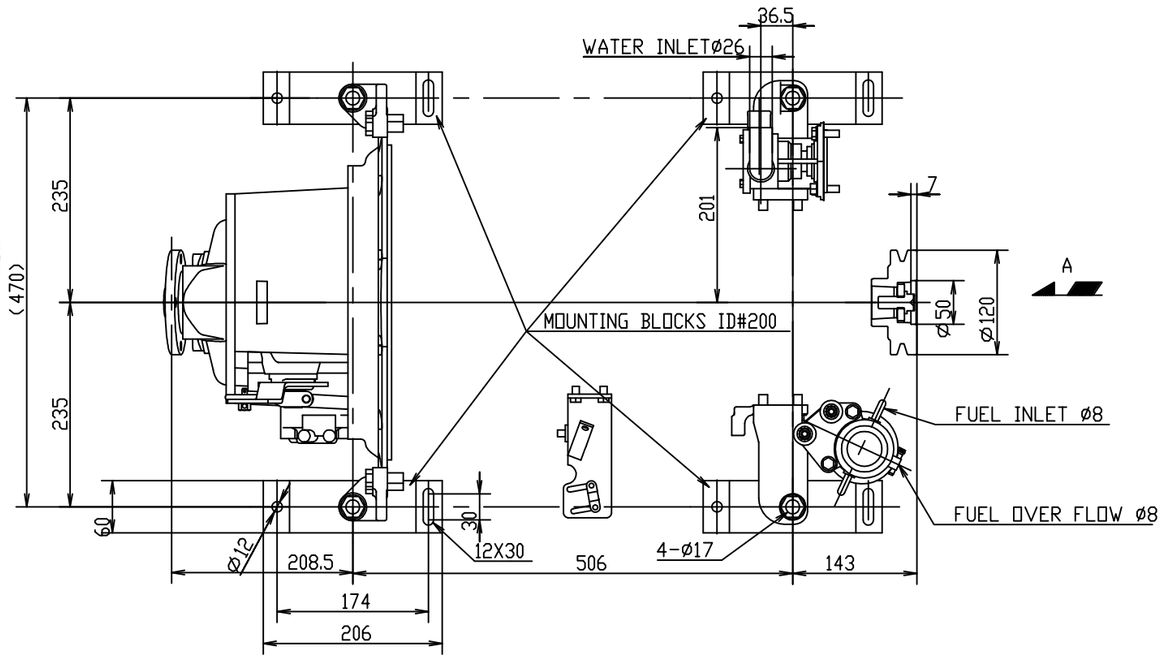

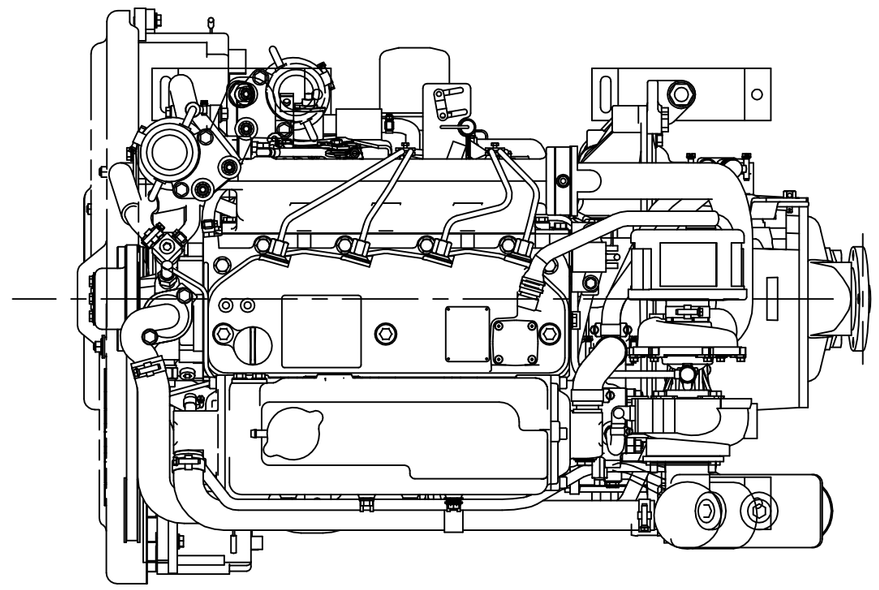

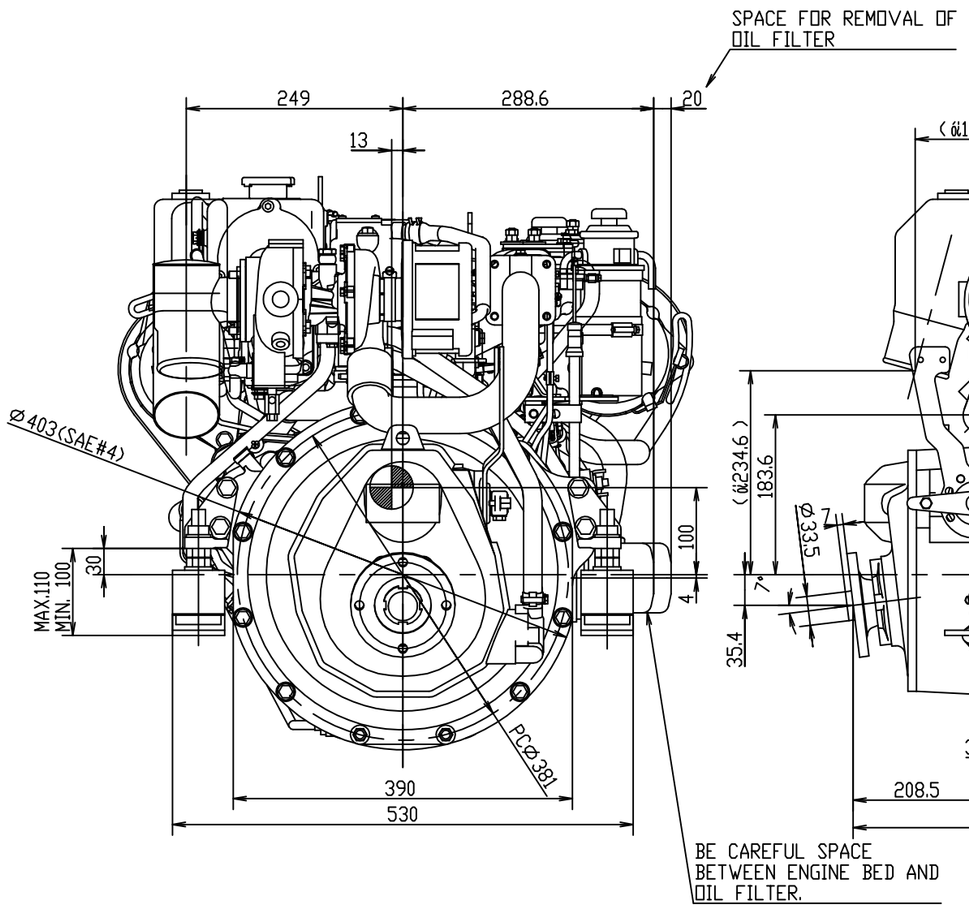

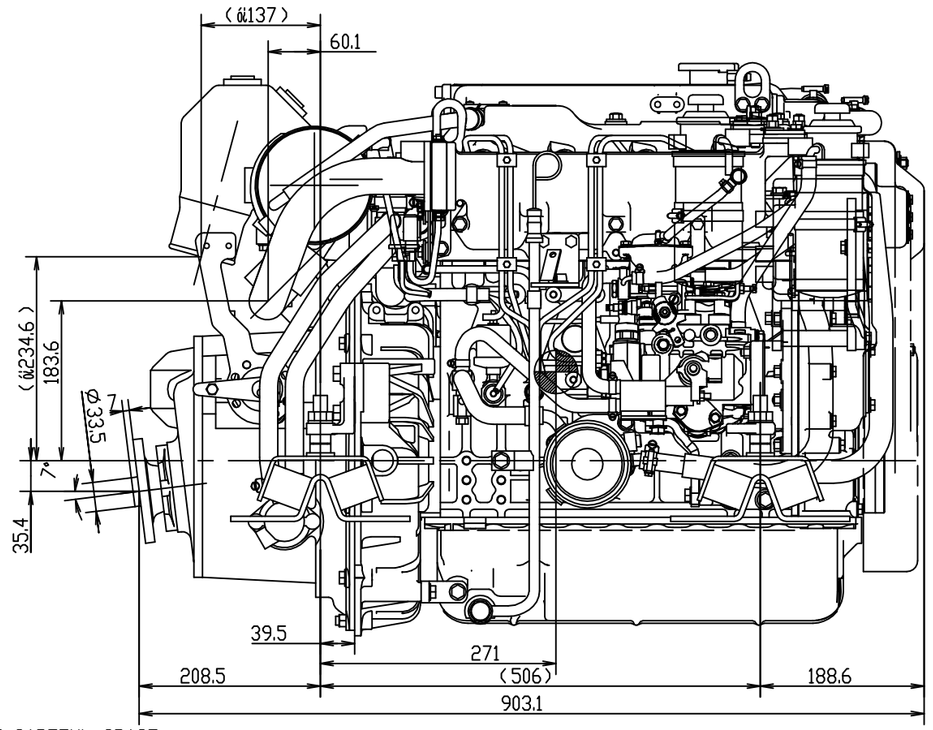

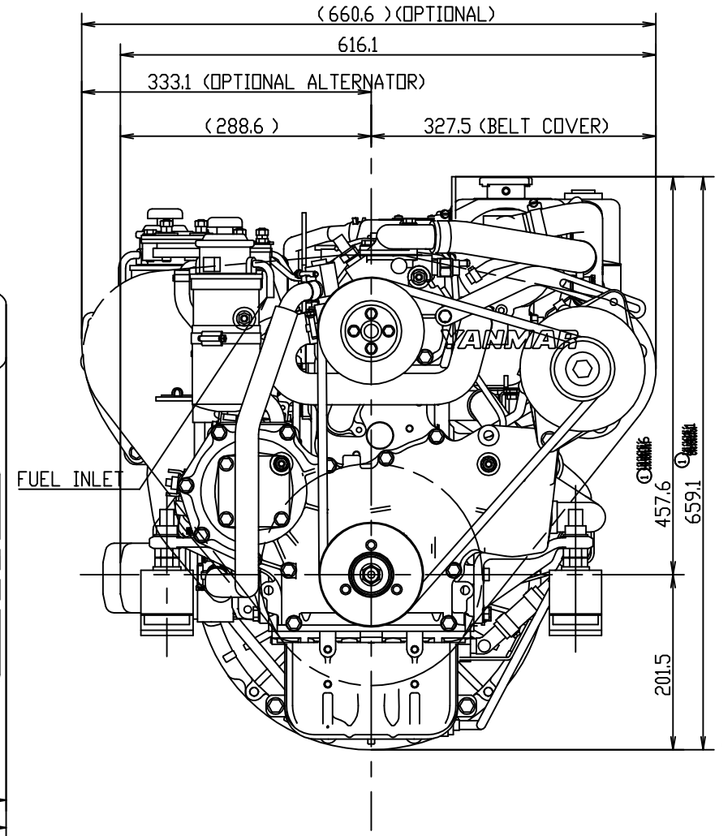

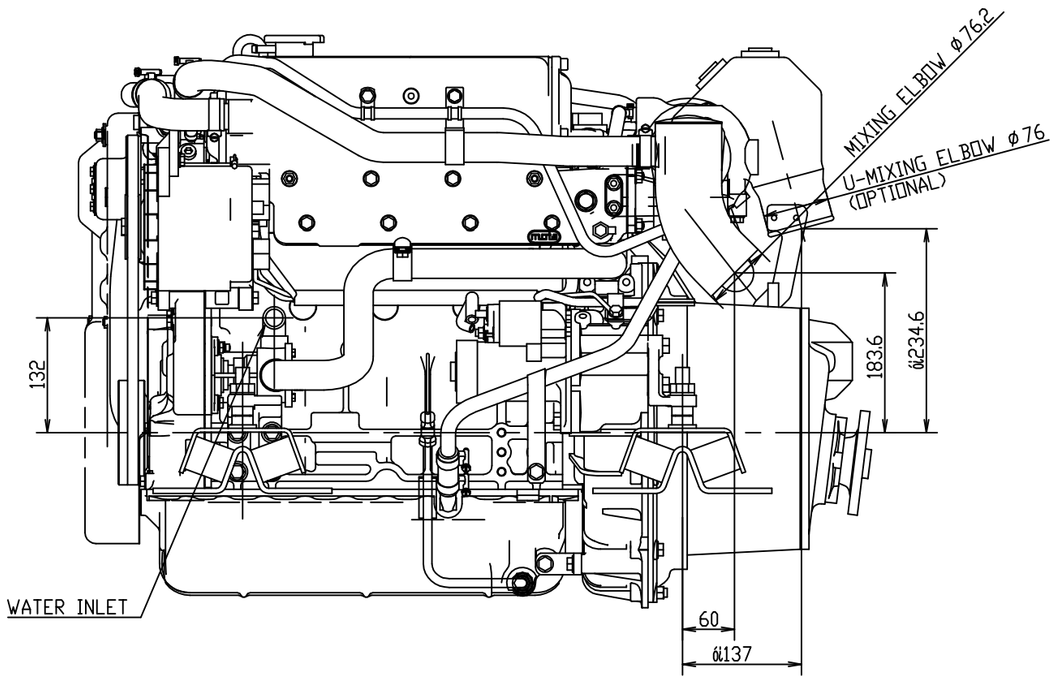

3D-CAD

NOTICE		
GEOMETRICAL TOLERANCE		
KIND OF TOLERANCE		SYMBOL
FORM	STRAIGHTNESS TOLERANCE	—
	CIRCULARITY TOLERANCE	○
	PROFILE OF LINE TOLERANCE	⌒
	FLATNESS TOLERANCE	▱
	CYLINDRICITY TOLERANCE	⌭
	PROFILE TOLERANCE OF SURFACE	⌓
ORIENTATION	PARALLELISM TOLERANCE	//
	PERPENDICULARITY TOLERANCE	⊥
	ANGULARITY TOLERANCE	∠
LOCATION	POSITIONAL TOLERANCE	⌖
	COAXILITY OR CONCENTRICITY TOLERANCE	◎
	SYMMETRY TOLERANCE	⌯
RUN-OUT	CIRCULAR RUN-OUT TOLERANCE	↗
	TOTAL RUN-OUT TOLERANCE	⌰

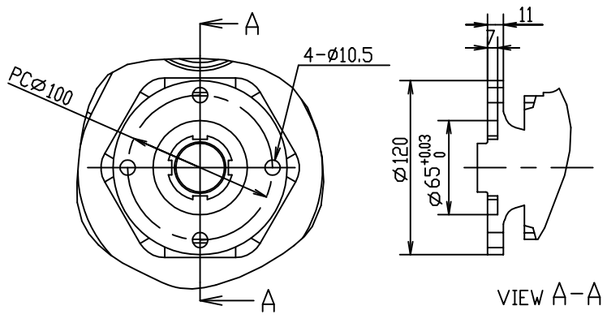

DETAIL OF COUPLING
SCALE 1/3

VIEW A-A

DIRECTION OF ROTATION

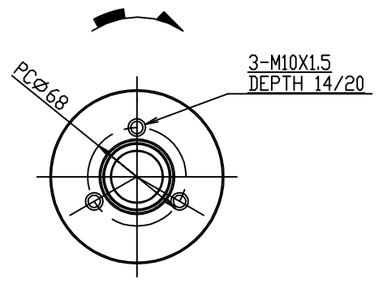

DETAIL OF PULLEY
SCALE 1:3
VIEWED FROM A

NOTE
1.DWG.SHOWS MOUNTING BLOCKS AT ORIGINAL HEIGHT.
ENGINE WEIGHT WILL COMPRESS BLOCKS BY 4MM(APPROX).
2.MOUNTING BLOCKS ARE EQUIPPED FOR STANDARD ACCESSORY.
3.THE FIGURES MARKED WITH &t SHOW THE DIMENSIONS WITH U-MIXING ELBOW, OR OPTIONAL COUPLING.
4. ⊕ SHOWS THE CENTER OF GRAVITY.

SPECIFICATIONS				
Model			4JH4-TE	
Continuous Power(ISO 8665) kW/min -1			50.2/3101	
Fuel Stop Power	Propeller shaft(ISO 8665) kW/min -1		53.0/3200	
	Crankshaft(ISO 8665) kW/min -1		55.2/3200	
Reduction ratio		1.47	2.14	2.63
Dry mass kg(lb.)		Approx. 232(511)		
Direction of Crankshaft rotation		Counter-clockwise		

	SEC.MANAGER	MODEL	4 JH4 TE		SCALE 1:5
CHECKED Y.Sato K.Shiga	SPECIALIST 〃	QTY	1		MATERIAL
DESIGNED M.Nishino	DRAWN K.Shimizu	DATE:Y.M.D 2005.4.20	NAME	4JH4-TE OUTLINE (WITH KM4A2 MARINE GEAR)	

MANAGER

YANMAR
YANMAR CO.,LTD. DEVELOPMENT DEPT.

CODE B2-29671-0850 REV.1 DRAW SIZE A1